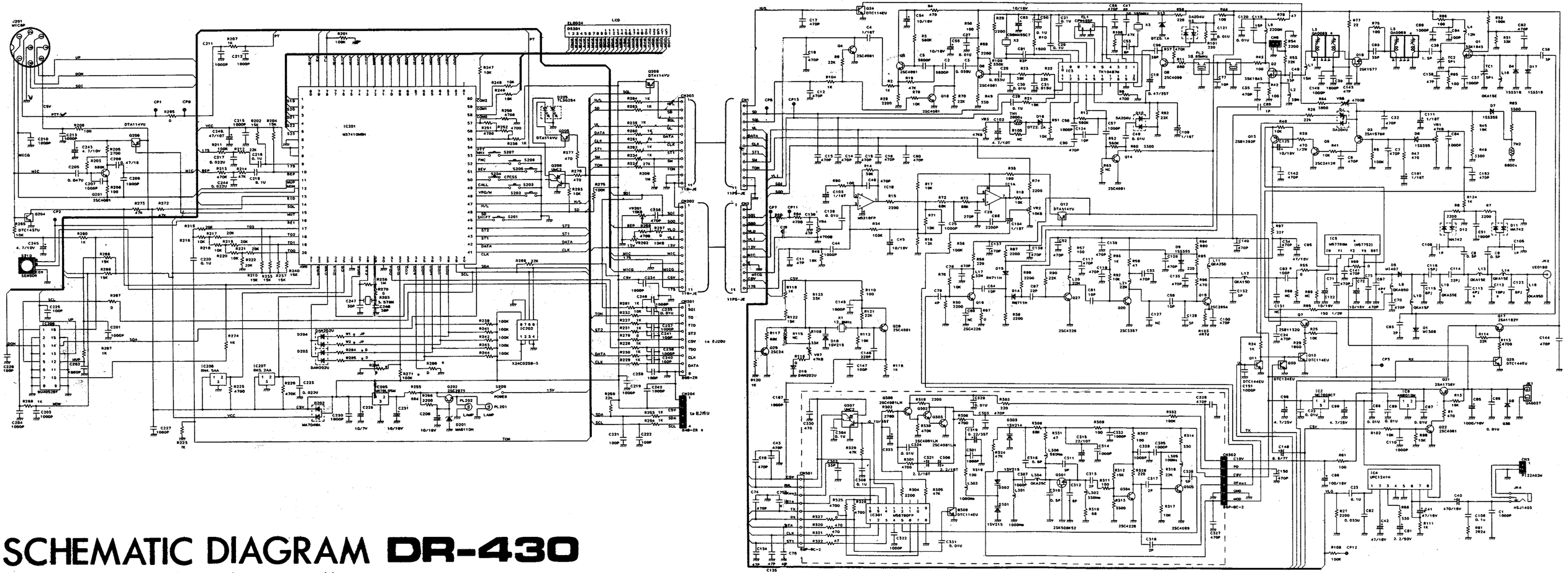

SCHEMATIC DIAGRAM DR-430

Specifications are subject to change without notice or obligation.

PK0048